NATUZZI ITALIA

Domino 2226

- Vers. 009

- Vers. 225+198+049

- Vers. 047+028+029+028+001+223

NATUZZI ITALIA

Domino 2226

SCHEMATICS

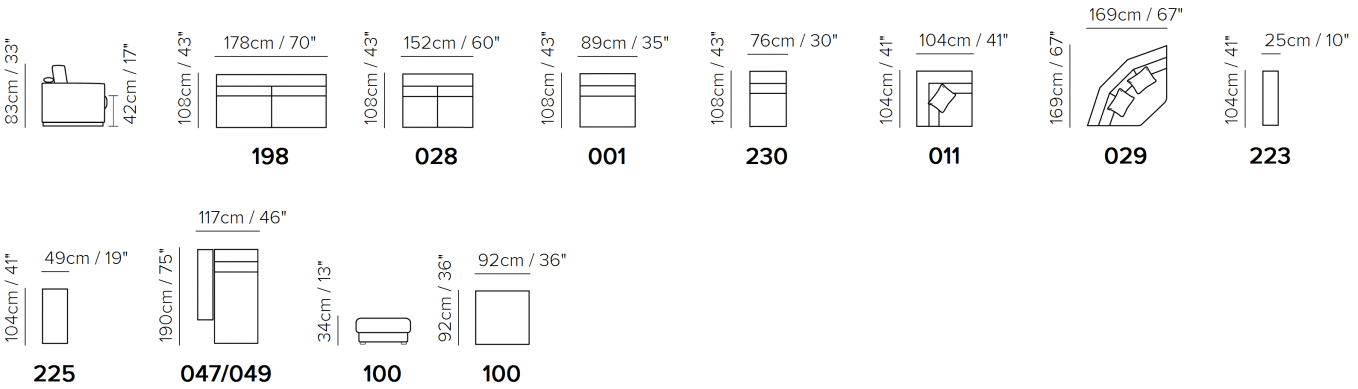

COMPOSITION EXAMPLES

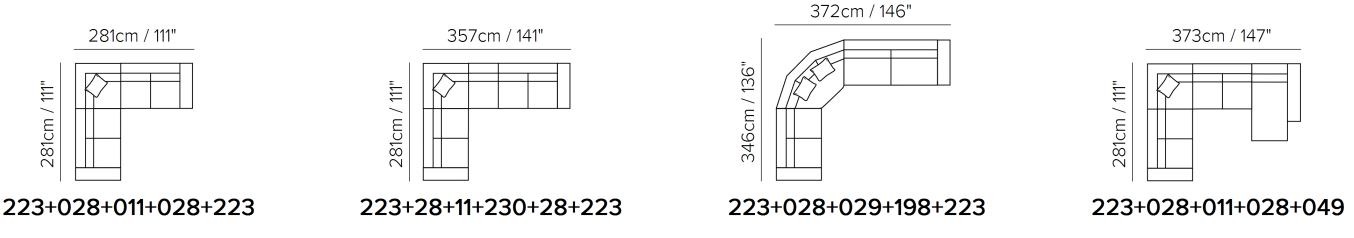

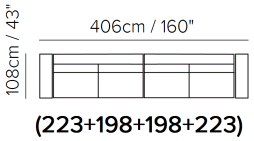

© 2012 Natuzzi S.p.A. - All rights reserved. The trademark, logos and designs are property of Natuzzi S.p.A. Any unauthorized reproduction, copying, disclosure, modification or use (in any way) is strictly forbidden.

This information is based on the latest product information available at the time of printing. The right to discontinue and make changes is reserved. Printed on 09/09/2021 - Pricelist AW